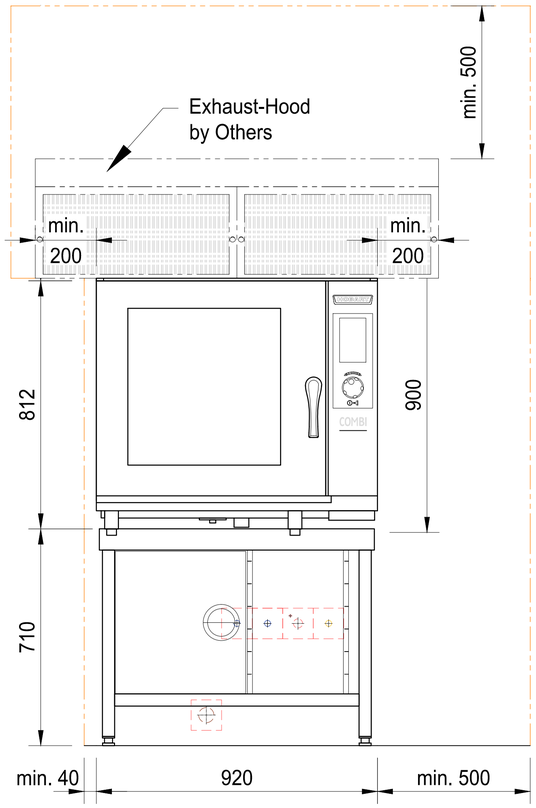

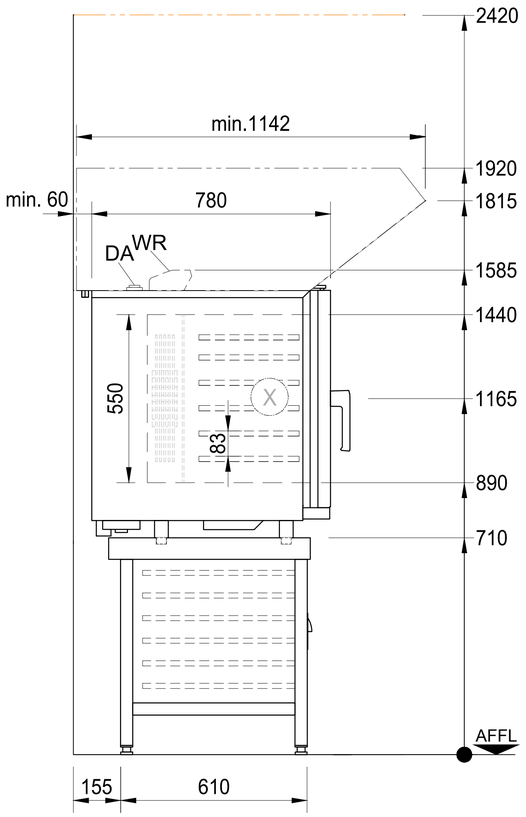

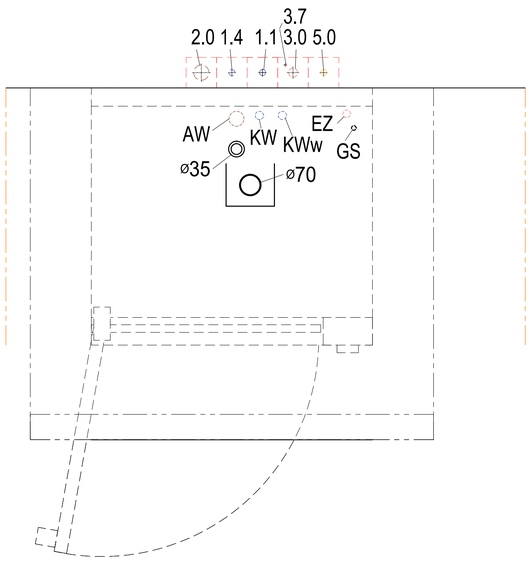

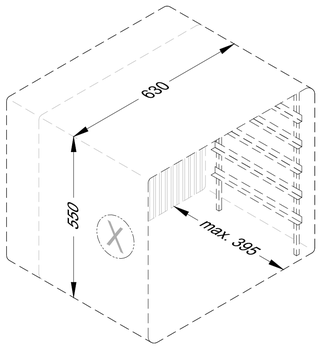

HOBART

GENERAL LEGEND

AW	=	drain water	KW	=	cold water	üOKFF	=	above finished floor
Dat	=	dataline	KWw	=	cold water soft	SFB	=	separate filling-boiler
EZ	=	power line (supply)	LR	=	conduit Ø	VEW	=	demineralized water
FD	=	floor opening	CNS	=	stainless steel (inox)	WD	=	wall opening
HW-VL	=	hot water flow	MK	=	supply chanell	WS	=	wall slot
HW-RL	=	hot water return	PA	=	equipotential conductor	WW	=	warm water
KB	=	cored hole Ø	STL	=	control line	WWw	=	warm water soft

HOBART

GENERAL INFORMATION

Connections: The connection of the convection steamer to all services (e.g. electrical, water, drain, exhaust) must comply with all national and local codes of practice and must be carried out by qualified people.
Dimensions: Dimensions in the drawing are finished dimensions in Millimeters.
Transport: Minimum measurements of entry doors = outer largest dimension of machine height + 300mm; machine width + 400mm!
Shut-off valves: The Shut-off valves for the convection steamer must be provided by the customer.
Floor drain: Splash floor drains should be installed for machine cleaning and for general cleaning purpose.
Ventilation: The ventilation and exhaust for the room must be according to VDI 2052. Radiated heat emissions must be considered.
Installation: Installation in accordance to DIN EN 61770.

HOBART

Attention! Warning!

Gas operation only permitted with exhaust hood and fresh air supply.
Must Comply with the installation and operating instructions!

Machine-Type:	**Convection Steamer COMBI**		**Heating: Gas**
Model:	**HEJ 061 G**		**Operation: Right**
Capacity:	**6 GN1/1**	**Inner Space: 85 dm³**	**Main-Switch: by others**

required supply (by others) (all installations according to local regulations) (technical feasibility must be checked on site)

Gas		Total Load	Pressure	Consumption	Dimension	Connection	Location
5.0	G31 Propane	23,0 kW	37± 4 / 50± 5 mbar	1,79 kg/h			400mm AFFL
5.0	G30 Butane	23,0 kW	50± 5 / 28± 3 mbar	1,81 kg/h			400mm AFFL
5.0	G25 Natural Gas	23,0 kW	20± 2 mbar	2,76 m³/h			400mm AFFL
5.0	G20 Natural Gas	23,0 kW	20± 2 / 25± 3 mbar	2,43 m³/h			400mm AFFL

Electrical		Voltage	Frequency	Structure	Fuse		Total Load		Location
3.7	PA	Equipotential							400mm AFFL
3.0	EZ	230 V	50 Hz	1-N-PE	3 x 10 A		0,3 kW		400mm AFFL

Water		Consumption	Temp.	Chloride / Chlorine	Hardness	Conductance	Dimension	Connection	Location
2.0	AW	Drain Approx.80°C (Siphon provided by customer)					DN50	Drain pipe	100mm AFFL
1.4	KW	min.10l/min	max.23°C	CL^- max.100mg/l	0-3,76°e	min.20µS/cm	DN20	G ¾ male	400mm AFFL
1.1	KWw			Cl_2 max.0,2mg/l	(0,5mmol/l)				

Water treatment: Generally we recommend the use of the demineralisation HYDROLINE STEAM CD at> 3°d

Flow-Pressure provided ***min. 1,5 bar / 21,7 psi - max. 6,0 bar / 87,0 psi*** (above 6,0 bar must be lowered with a pressure reducer, below 1,5 bar need collulting with service)

machine-side connentions and data

WR = vapors exit / Location: upper edge machine	DA = Steam exit / Location: upper edge machine
EZ = Power input / Location: lower edge machine	AW = Drain / Location: lower edge machine / KWw/KW / Location: lower edge machine

Heat-Radiation (thermal output to the room)

latent: 2,8 kW | sensibel: 1,8 kW

Index	Änderungen / Changes	Datum / Date	Name
-	-	-	-

Das Urheberrecht an dieser Zeichnung verbleibt bei der HOBART GmbH.
Jede nicht von uns schriftlich genehmigte Benutzung, Verfielfältigung, Überlassung an Dritte ist strafbar und macht schadensersatzpflichtig.

This documnet contains proprietary and confidential data of HOBART GmbH. No disclosure, reproduction or use of any part there of may be made without written permission of HOBART GmbH.

HOBART

HOBART GmbH
Robert-Bosch-Straße17
77656 Offenburg, Germany

Tel.: +49(0)781.600-0
Fax.: +49(0)781.600-2319
www.hobart.de

Datum / Date: 12.08.2019	Project:		
Gezeichnet / Drawn by: J.Boschert			
Geprüft / Checked by: -			
Projectmanager:	Maßstab / Scale: 1:20 @ A3	Order-No.:	Zeichnungsnummer / Drawing-No.: